PB-FREE

SPECIFICATION FOR APPROVAL

(FOR LCD MNT SXGA A/D BOARD APPLICATION PURPOSE)

TFT LCD A/D BOARD

PART NO. FAD0180-xxx

BUYER'S PART NO. :

APPROVED	REFERENCE

(PLEASE RETURN ONE OF THESE TO US IMMEDIATELY WITH YOUR SIGNATURE FOR APPROVAL)

Technical Reference

ANALOG RGB & DVI
FOR TFT LCD

Model: F-180

Copyright 2010 KANG JIN Co., Ltd.
All Rights Reserved

1. Description

The F-180 from KangJin is an interface board for TFT LCD panel providing high quality of screen image from the analog RGB & DVI from various type of graphics card.
This board supports from VGA to SXGA resolution at the maximum vertical refresh rate of 75Hz with full screen image expansion.

2. General Features

- Panel Support:
  - VGA, SVGA XGA and SXGA resolution TFT LCD panels
  - TFT LCD Panels from LG-Philips, Samsung, BOE-Hydis, AUO, Sharp etc.
  - Up to 16M color
  - LVDS type panel interface
- Input Signal:
  - All VESA standard RGB input with clear image
  - Refresh rate from 56Hz up to 75Hz
  - Automatic video standard detection
  - High display quality of expanded image from the lower resolution input
  - Digital Visual Interface(DVI)
- Easy to use On-screen Display menu to control all supported function
  - Automatic adjustment for screen image control
  - Bright and Contrast control
  - Manual Geometry control for H/V position, H size, and Phase adjustment
  - Color balance and color temperature control
  - Positioning of OSD Menu and 5 language selection.
  - Input source selection
  - Up to 5 key OSD control button
- Audio control for I2C type Amp device
- DPMS VESA compliant power management
- VESA DDC1/2B Plug & Play operation
- Support Audio amplifier (Optional)

3. Electrical Specification

3.1. Input Characteristic

Description	Signal	Unit	Min	Typical	Max.	Remarks
Power In (12Vdc)						
	Input Voltage	Vdc	11.4	12	12.6	
	Consumption	Watt		9.5		Board only
RGB Input						
	Analog RGB	Vp-p	0		0.7	
	Sync	Vdc	0		5.5	
	H Frequency	KHz	31.43		79.976	
	V Frequency	Hz	56.25		75.03	
DVI input						
	Differential output	mVp-p	150		1200	
	Input clock freq	MHz	20		135	

3.2. Output Characteristics

Description	Signal	Unit	Min	Typical	Max	Remarks
LVDS Interface						
	Differential output	mVp-p	250	350	450	
	LCD Power (12v)	Vp-p	12.40	12	12.60	
	LCD Power (5v)	Vp-p	4.75	5	5.25	
	LCD Power (3.3v)	Vp-p	3.16	3.3	3.5	
Inverter Interface						
	Power out	Vdc	11.4	12	12.6	
		Vdc	4.75	5	5.25	
	On/off control	Vp-p	0		5.25	L=off, H=on
	Bright Control	Vp-p	0		5.25	

4. Notes for Installation

This controller is designed for RGB & DVI monitor using different size of TFT LCD panels. This section provides some guidelines for assembly and preparation of a finished display solution.

Preparation: Before proceeding, it is important to familiarize yourself with the parts making up a system and the various connectors, mounting holes, and general layout of the controller. All connectors have their own number printed on the controller board. And their signal arrangements are shown in the following relevant sections.

LCD Panel: This controller has 12V or 5V or 3.3V LVDS interface logic on the board for different kind of TFT LCD panel. Due to the different signal timing and electrical characteristics from each LCD panel manufacturer, we need to use different Firmware, different LCD interface cable and select DC power level for LCD panel even on the same board.
For selecting DC power level, put the jumper marked CN7 on the down position. Supplied power level, 5Vdc and 12Vdc are marked on the board.

LCD signal cables: In order to provide a good signal, it is recommended that LCD signal cables should be no longer than 20cm. But it depends on signal frequency and LCD interface type.

Inverter: Each LCD panels have their own inverter to obtain optimum performan and
long lifetime. Because, Each LCD panel makers use different type of back light tubes fo their all different models and Inverter drives the tubes directly.
The controller board just supplies the power for inverter logic and controls a light On/Off signal and a brightness control signal. So, it is important to use the inverter that has

Inverter cable: This cable supplies Inverter's power, an on/off control signal and a brightness control signal to the inverter.

OSD Button: See Operational Function section.

3 Color LED: This LED shows the state of controller.
- Green – Normal state
- Amber – Off mode (Can't find video signals)
- Green alternates with Amber per 0.5 second – Stand by mode
- Green alternates with Amber per 1 second – Suspend mode

GREEN COLOR LED: This LED indicate what input signal source

Power switch: This switch is located on OSD button board.

Power input: +12Vdc is required to supply enough power for the controller, Inverter and LCD panel.

VGA Input Cable: As this may affect regulatory emission test result, a suitably shielded

EMI: Shielding will be required for passing certain regulatory emissions tests. Also the choice of video board and power supply can affect the test result.

Consideration should be given to:

- Electrical insulation.
- Grounding.
- EMI shielding.
- Cable management.
- Heat & ventilation

Caution: Ensure adequate insulation is provided for all areas of the PCB with special attention to high voltage parts such as the inverter.

***** Remarks *****

For a specific panel use, One LCD panel sample and full technical specifications for the LCD panel from the manufacturer are required to test for tuning up screen image.

Frontek can provide engineering service for customer specific controller development.

Please contact to Frontek or sales representatives.

5. Setup for Operation

Once the circuit has been connected, a setup procedure for optimal operation is required some time.
The following instructions are likely to form the basis of the finished product operation manual.

PC Settings

The PC needs to be set to an appropriate graphics mode that has the same resolution with the LCD panel to have clear screen image. And the vertical refresh rate should be set to one of 56~75Hz, non-interlaced.

LCD Display System Settings

The OSD (On Screen Display) provides certain functions to have clear image and others. This board supports 5 buttons OSD operation as a standard. The control functions defined o OSD operation are as below.

1) OSD Menu(Optional)

OSD Menu			Description	Remarks
Picture	Brightness		Adjust the brightness of the screen	
	Contrast		Adjust the contrast of the screen	
	H.Position		Adjust the horizontal position of the screen's image	Only usable on Analog Mode
	V.Position		Adjust the vertical position of the screen's image	
	Phase		Adjust the focus of the screen's image	
	Clock		Adjust the horizontal size of the screen's image	
	Auto Adjust		Automatically adjust the Horizontal position, Vertical position, Horizontal size, and Phase Window's background or characters should be displayed on your Full screen prior to proceed this function	
Color	Color Temp	User Reddish Bluish	Control the temperature of the color	
	Red		Control the intensity of the color of the screen's image (Usable when Color temperature is USER mode.)	Only usable on Analog Mode
	Green			
	Blue			
	Auto Color		Adjust the color balance of the screen	

 OSD	Language	English French German Spanish Italian Korean Polish	Select one of the seven language	Usable on all
	OSD H.Posi.		Select OSD MENU horizontal position	
	OSD V.Posi.		Select OSD MENU vertical position	
	OSD Timer		OSD MENU disappear from over the screen after setting time	
	Transparency		Adjust the transparency of the OSD menu	
 Misc.	Language	English German French Spanish Korean	Select one of the seven language	
	Recall	Initialize the current mode & setting value		
	Input Select	Analog	Analog signal(RGB)	
		Digital	DVI digital signal	
	Audio		Audio ON/OFF Select	Audio Option

2) Hotkey Function Definition (optional)

Key Name	Function	비고
Menu Key	OSD Menu Select/Input Change(Long)	
Auto Key	Auto Adjust Hot Key	
Power Key	Power On / Off	
+ Key	OSD Menu Up Select/Mute On/Off	
- Key	OSD Menu Down Select/Volume Control	

6. Applicable Graphic and Video Mode

6.1. RGB Input format

The microprocessor measures the H-sync, V-sync and V-sync/H-sync polarity for RGB inputs, and uses this timing information to control all of the display operation to get the proper image on a screen.

This board can detect all VESA standard Graphic modes shown on the table below and

Table 6.1) RGB Input format

Character / Mode	Pixel Freq.	Horizontal Timing				Vertical Timing			
		Sync Polar	Freq.	Total	Active	Sync Polar	Freq.	Total	Active
	MHz		KHz	Pixel	Pixel		Hz	Line	Line
640x350 @70Hz	25.151	P	31.44	800	640	N	70.02	449	350
720x400 @70Hz	28.295	N	31.44	900	720	P	70.02	449	400
640x480 @60Hz	25.175	-	31.47	800	640	-	59.94	525	480
640x480 @67Hz	30.240	-	35.00	864	640	-	66.67	525	480
640x480 @72Hz	31.500	-	37.86	832	640	-	72.81	520	480
640x480 @75Hz	31.500	-	37.50	840	640	-	75.00	500	480
800x600 @56Hz	36.000	-	35.16	1024	800	-	56.25	625	600
800x600 @60Hz	40.000	-	37.88	1056	800	-	60.32	628	600
800x600 @72Hz	50.000	-	48.08	1040	800	-	72.19	666	600
800x600 @75Hz	49.500	-	46.88	1056	800	-	75.00	625	600
832x624 @74Hz	57.285	-	49.73	1152	832	-	74.55	667	624
1024x768 @60Hz	65.000	-	48.36	1344	1024	-	60.00	806	768
1024x768 @70Hz	75.000	-	56.48	1328	1024	-	70.07	806	768
1024x768 @72Hz	75.235	-	57.70	1304	1024	-	72.30	798	768
1024x768 @75Hz	78.750	-	60.02	1312	1024	-	75.03	800	768
1152x864 @60Hz	88.566	-	54.00	1640	1152	-	60.00	900	864
1152x864 @70Hz	93.930	-	62.62	1500	1152	-	69.58	900	864
1152x864 @75Hz	108.000	-	67.50	1600	1152	-	75.00	900	864
1152x870 @75HZ	100.00	-	68.68	1456	152	-	75.00	915	870
1280x1024@60Hz	108.000	-	63.98	1688	1280	-	60.02	1066	1024
1280x1024 @70Hz	124.995	-	74.40	1680	1280	-	69.99	1063	1024
1280x1024 @72Hz	134.626	-	77.91	1728	1280	-	72.00	1082	1024
1280x1024 @75Hz	135.001	-	79.98	1688	1280	-	75.03	1066	1024

7. Connectors and Signal Arrangement

7.1 Summary for connectors

Reference	Description	Connector Type
CN3	OSD Connector for OSD Button, power on/off switch.	JS-1125-09
CN6	LCD Interface connector for LVDS type	JS-1235R-30WB (CHAOSIN)
J3	VGA Input connector for 15P DSUB	
J2	DVI Input connector for a DVI Jack	
J1	Power input connector for a DC Jack	EJ210-2.5pi
CN1	Touch Panel power connector	
CN4	Inverter interface connector for inverter power and on/off and brightness control	JS-1125-06(CHAOSIN)
J4,J5	Audio In/Out for Earphone Jack	ST-324
CN5	Speaker Output connector	JS-1125-04

7.2 Signal Arrangement

.

1) OSD Connector for OSD Button, power on/off switch (CN3)

Pin No.	Symbol	Description	Pin No.	Symbol	Description
1	Key 5	Input Key 5	6	GND	Ground
2	Key 4	Input Key 4	7	LED_G	Green_LED
3	Key 3	Input Key 3	8	LED_R	Red LED
4	Key 2	Input Key 2	9	Key 0	Input Key 0
5	Key 1	Input Key1			

2)LCD interface connector for LVDS type (CN6)

Pin No.	Symbol	Description	Pin No.	Symbol	Description
1	LCD VCC	LCD Logic power	16	RXEIN1-	Transmit Even data1-
2	LCD VCC		17	GND	Ground
3	LCD VCC		18	RXEIN0+	Transmit even data0+
4	OPTION	Panel option	19	RXEIN0-	Transmit even data0-
5	NC	Not connected	20	RXOIN3+	Transmit odd data3+
6	NC	Not connected	21	RXOIN3-	Transmit odd data3-
7	GND	Ground	22	RXOCKIN+	Transmit odd clk+
8	RXEIN3+	Transmit Even data3	23	RXOCKIN-	Transmit odd clk-
9	RXEIN3-	Transmit Even data3-	24	GND	Ground
10	RXECKIN+	Transmit Even clk+	25	RXOIN2+	Transmit odd data2+

11	RXECKIN-	Transmit Even clk-	26	RXOIN2-	Transmit odd data2-
12	RXEIN2+	Transmit Even data2+	27	RXOIN1+	Transmit odd data1+
13	RXEIN2-	Transmit Even data2-	28	RXOIN1-	Transmit odd data1-
14	GND	Ground	29	RXOIN0+	Transmit odd data0+
15	RXEIN1+	Transmit Even data1+	30	RXOIN0-	Transmit odd data0-

3) VGA Input connector for 15P D-Sub (J3)

Pin No.	Symbol	Description	Pin No.	Symbol	Description
1	Red	Red, analog input	9	NC	Not connected
2	Green	Green, analog input	10	DGND	Detect connector
3	Blue	Blue, analog input	11	NC	Not connected
4	NC	Not connected	12	DDC Data	DDC Data
5	DGND	Digital ground	13	H-sync	Horizontal sync, input
6	AGND	Ground for Red return	14	V-sync	Vertical sync, input
7	AGND	Ground for Green return	15	DDC Clk	DDC Clk
8	AGND	Ground for Blue return			

4)DVI Input connector for a DVI Jack(J2)

Pin No.	Symbol	Description	Pin No.	Symbol	Description
1	RX2-	Receive data2-	13	RX3+	Not connected
2	RX2+	Receive data2+	14	5V	DVI 5V
3	GND	AGND	15	GND	AGND
4	RX4-	Not connected	16	HP	HOT PLUG
5	RX4+	Not connected	17	RX0-	Receive data0-
6	SCL	DVI DDC SCL IN	18	RX0+	Receive data0+
7	SDA	DVI DDC SCA IN	19	GND	AGND
8	VS	VS DVI	20	RX5-	Not connected
9	RX1-	Receive data1-	21	RX5+	Not connected
10	RX1+	Receive data1+	22	GND	AGND
11	GND	AGND	23	RXC+	Receive clk+
12	RX3-	Not connected	24	RXC-	Receive clk-

5) Inverter interface Connector(CN4)

Pin No.	Symbol	Description (CN4)	Pin No.	Symbol (JP1)	Description
1	GND	Ground			
2	GND	Ground			
3	ADJ	Brightness Control			
4	On/Off	Backlight on/off			
5	+12V VCC	Inverter power +12V			
6	+12V VCC	Inverter power +12V			

6) Touch Screen Connector (CN1)

Pin No.	Symbol	Description
1	GND	Ground
2	+5V VCC	Touch Screen Power+5V

7) Speaker Output Connector (CN5)

Pin No.	Symbol	Description
1	Sound R	Sound R
2	GND	Ground
3	GND	Ground
4	Sound L	Sound L

9) BLOCK DIAGRAM

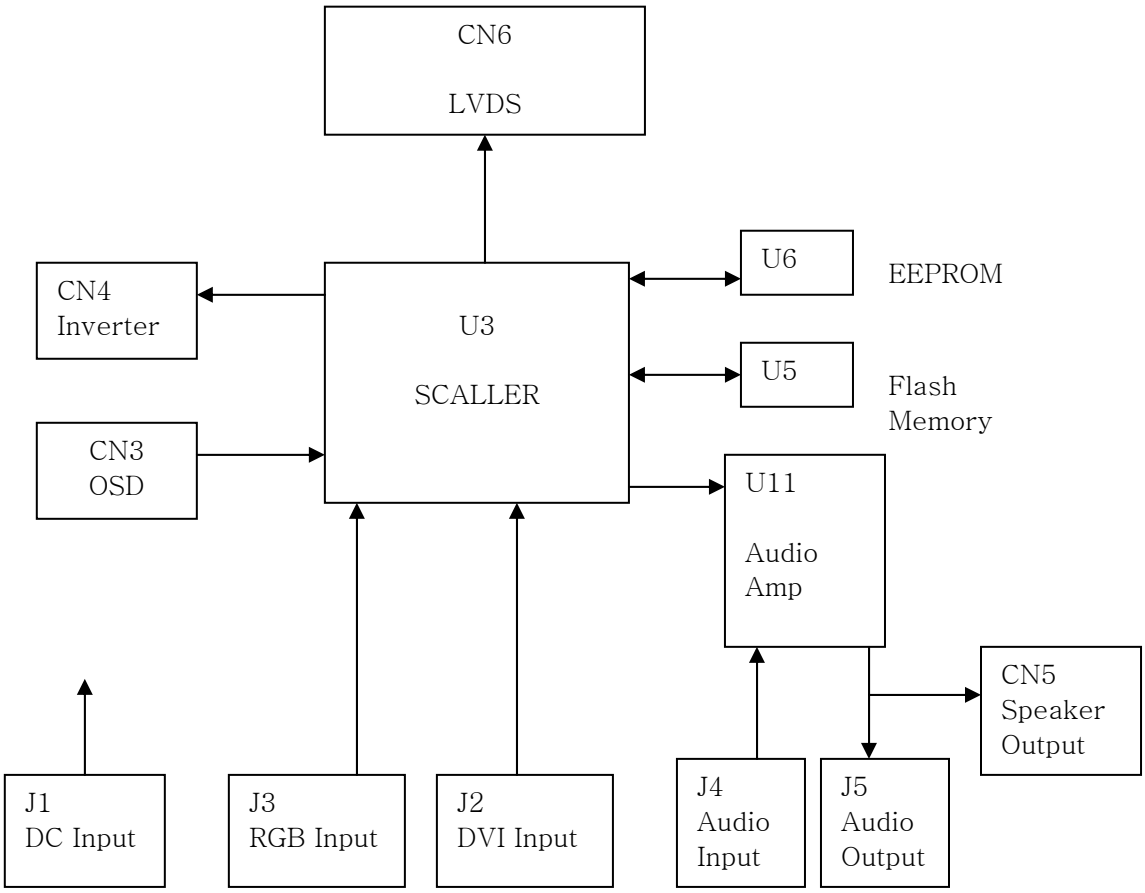

11. Mechanical Dimensio

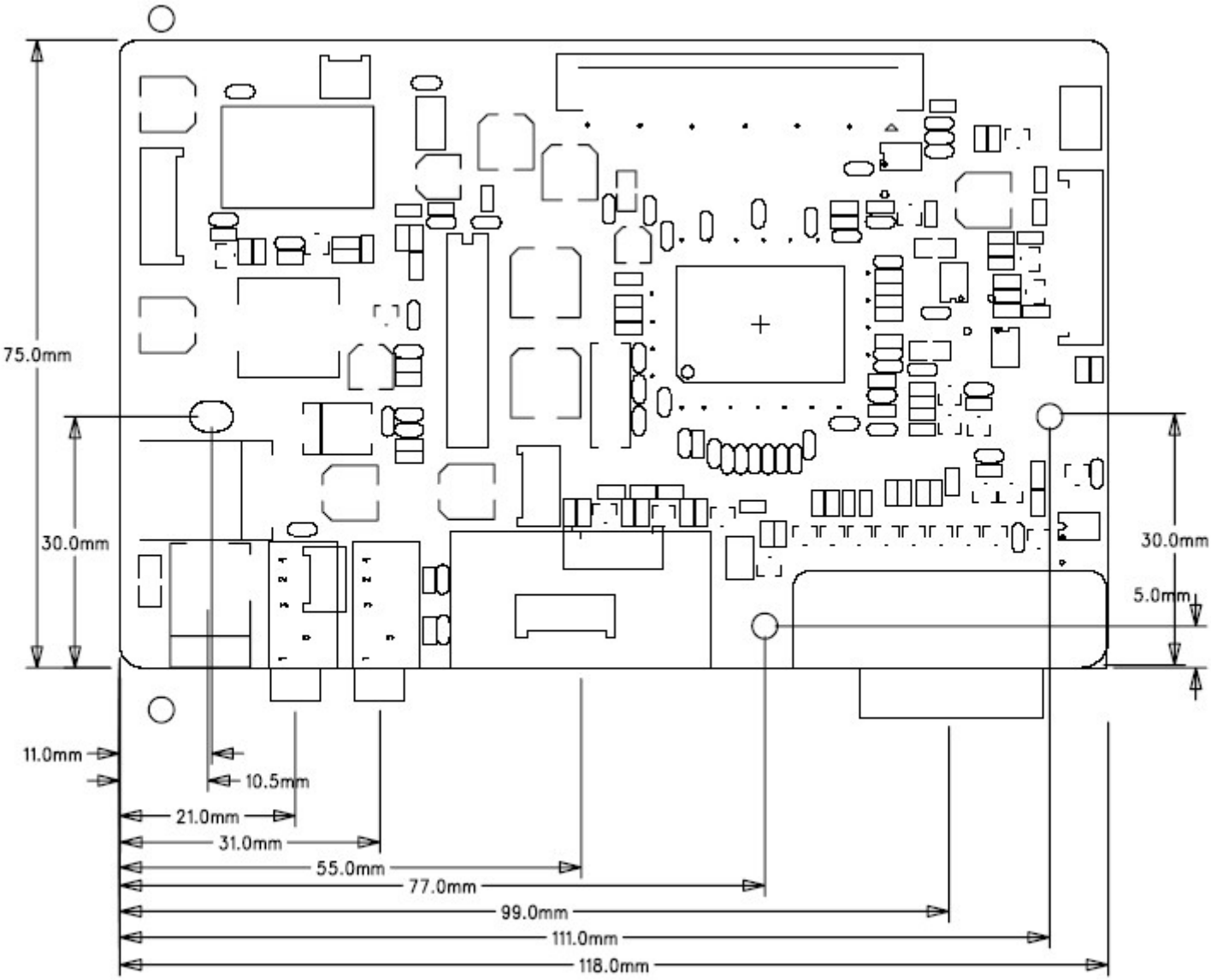
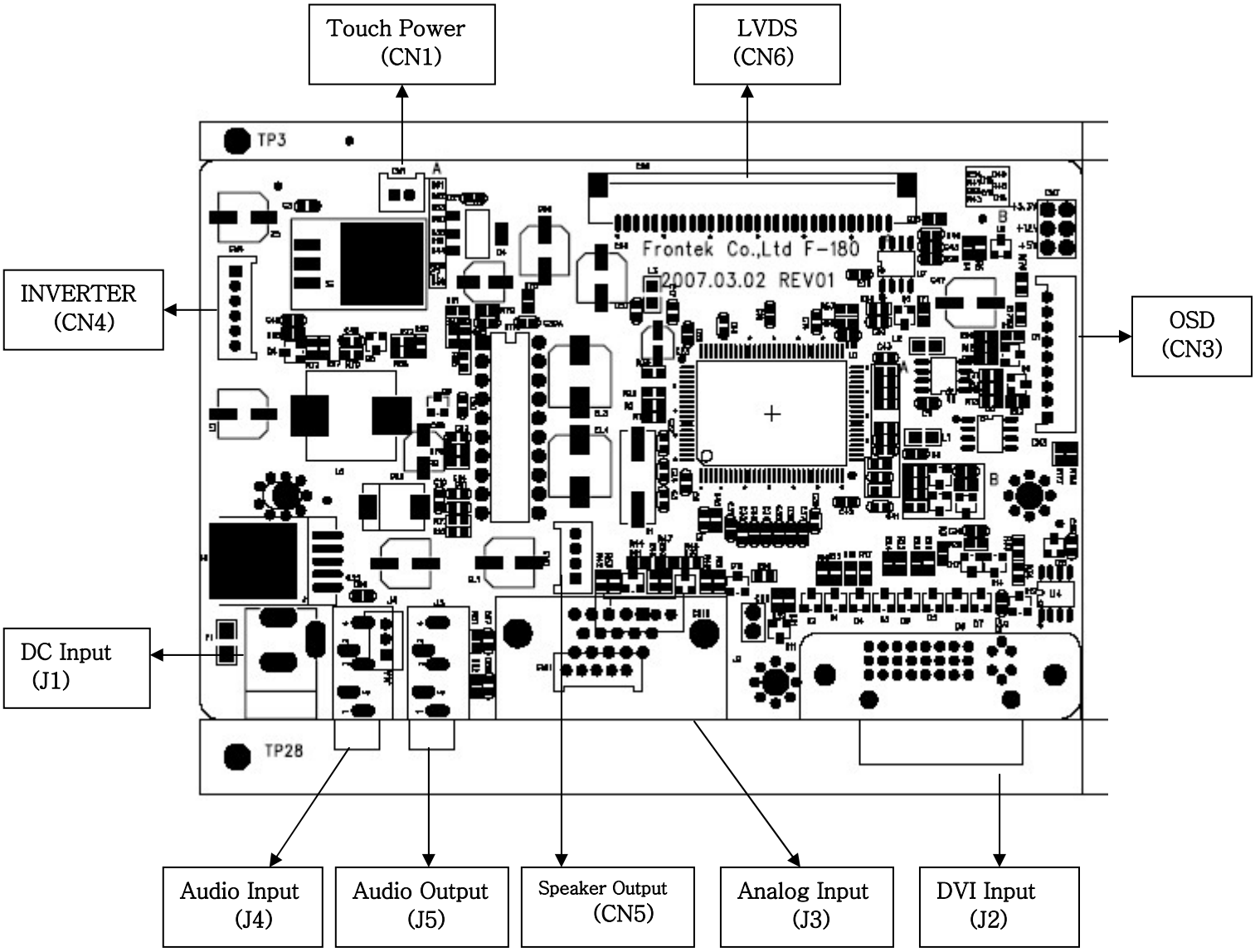
12) BOARD LAYOUT AND CONNECTORS NAME